3-SHELF STOCKPICKER TRUCK - SPS3-2236

APPROX WEIGHT: 134.51 lbs.
DOES NOT INCLUDE WEIGHT OF POWER OR PACKAGING!!!

*** ANY ADDITIONS, DELETIONS, OR OMISSIONS MUST BE CORRECTED ON THIS DRAWING AS THIS DRAWING WILL BE CONSIDERED ALL INCLUSIVE ***
ALL GRAPHICS PROVIDED ARE FOR REFERENCE ONLY. IF CERTAIN DIMENSIONS ARE CRITICAL PLEASE VERIFY THOSE DIMENSIONS WITH YOUR SALESPERSON

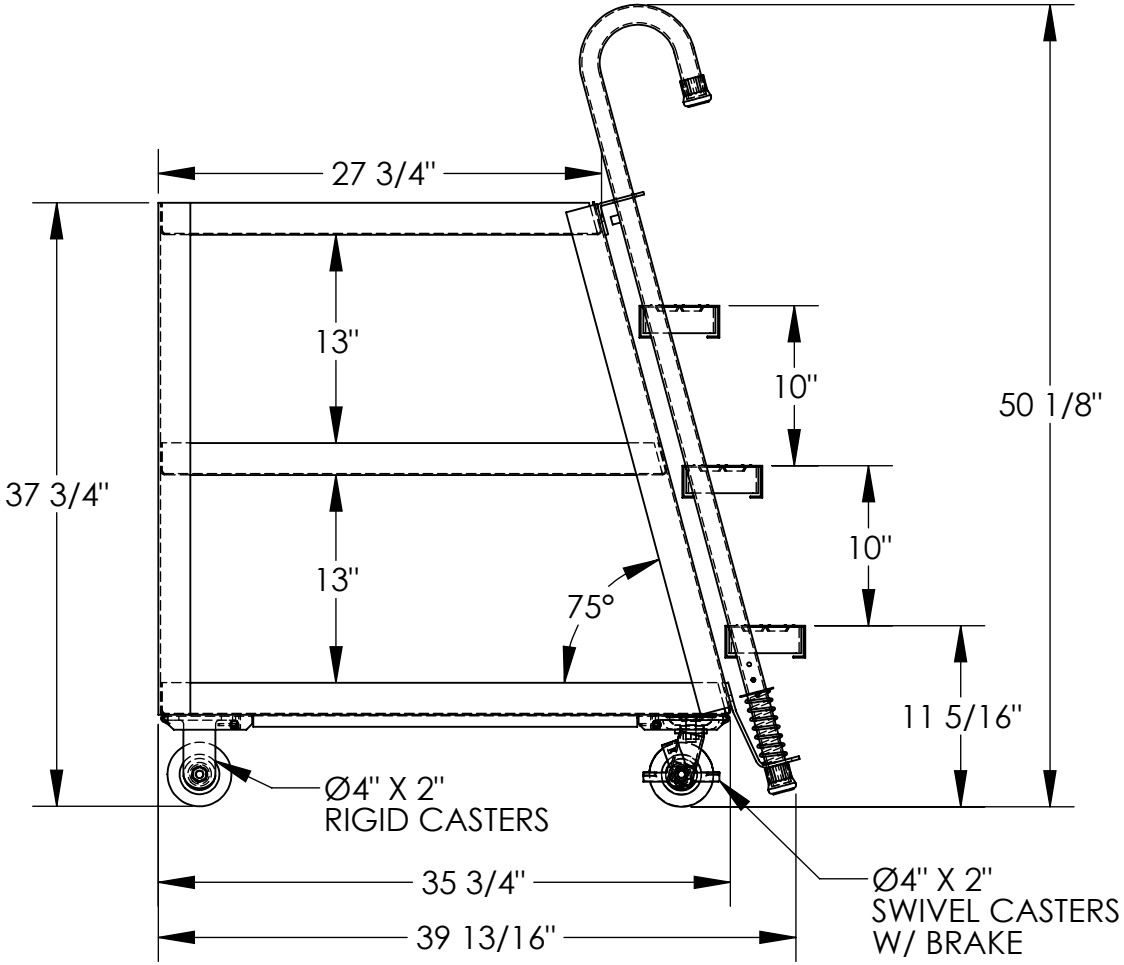

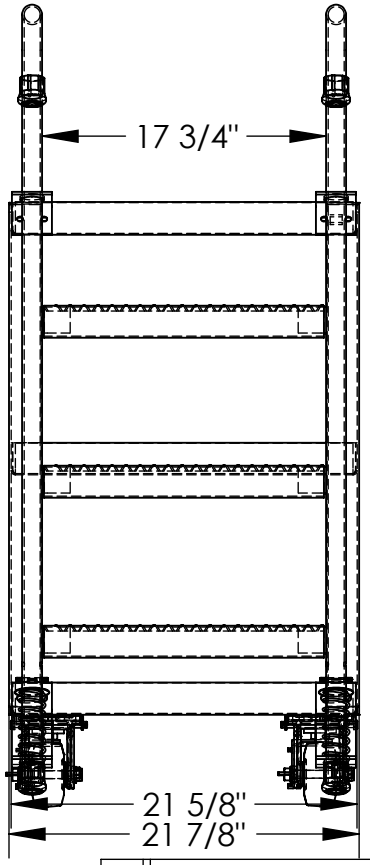

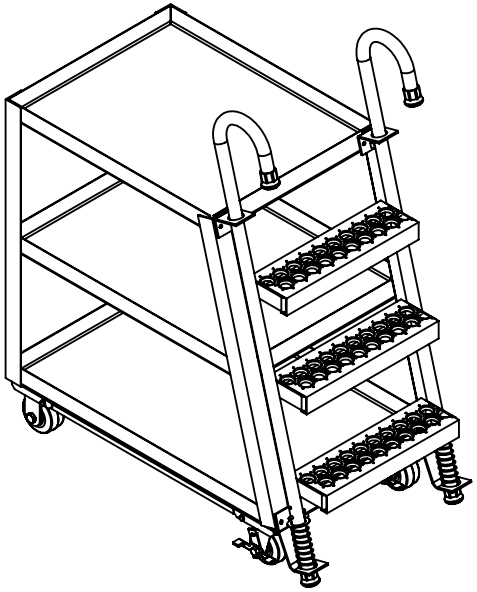

3D VIEW SHOWN FOR REFERENCE ONLY

DIMENSION TOLERANCE ± 1/4"

STANDARD FEATURES

MODEL NUMBER IS SPS3-2236
CAPACITY IS 1000 LBS. (550 LBS. PER SHELF)
OVERALL WIDTH IS 21 7/8"
OVERALL LENGTH IS 39 13/16"
OVERALL HEIGHT IS 50 1/8"
BOTTOM SHELF SIZE IS 21 5/8" X 35 3/4"
TOP SHELF SIZE IS 17 3/4" X 27 3/4"
TOP SHELF HEIGHT IS 37 3/4"
SHELF CLEARANCE IS13"
CASTERS ARE 4" X 2" MOLD-ON-RUBBER
(2) RIGID, (2) SWIVEL
STEEL FRAME CONSTRUCTION
DURABLE BAKED IN POWDER COATED BLUE FINISH
LADDER CAPACITY IS 350 LBS

SPECIAL FEATURES

NONE

APPROVAL

I, THE UNDERSIGNED, AGREE THAT THE PRODUCT AS REPRESENTED SATISFIES DESIGN AND DIMENSION REQUIREMENTS. I ALSO ACKNOWLEDGE MY DUTY TO CONFIRM PRODUCT AND INSTALLATION COMPLIANCE WITH ALL APPLICABLE FEDERAL, STATE AND LOCAL REGULATIONS AND STANDARDS.

UNITS REQUIRING APPROVAL DRAWINGS OR MODIFIED ARE NON-RETURNABLE

[ ] As drawn [ ] As marked

Signed:_____ Date:_____

Printed Name:_____

LEAD TIME WILL START UPON RECEIPT OF SIGNED APPROVAL DRAWING

DISTRIBUTOR'S NAME: VESTIL MANUFACTURING		P.O.# X
		W.O.# X
DRAWN BY: NHD	DATE: 08/25/2017	SALES: X
REFERENCE: X	SCALE: 1:12	FILE NAME: 32-007-044
QUOTED LEAD TIME: X	QUOTE # X	