ADJUSTABLE SPREADER BEAM - SBM-25

APPROX WEIGHT: 119.05 lbs.
DOES NOT INCLUDE WEIGHT OF POWER OR PACKAGING!!!

*** ANY ADDITIONS, DELETIONS, OR OMISSIONS MUST BE CORRECTED ON THIS DRAWING AS THIS DRAWING WILL BE CONSIDERED ALL INCLUSIVE ***
ALL GRAPHICS PROVIDED ARE FOR REFERENCE ONLY. IF CERTAIN DIMENSIONS ARE CRITICAL PLEASE VERIFY THOSE DIMENSIONS WITH YOUR SALESPERSON

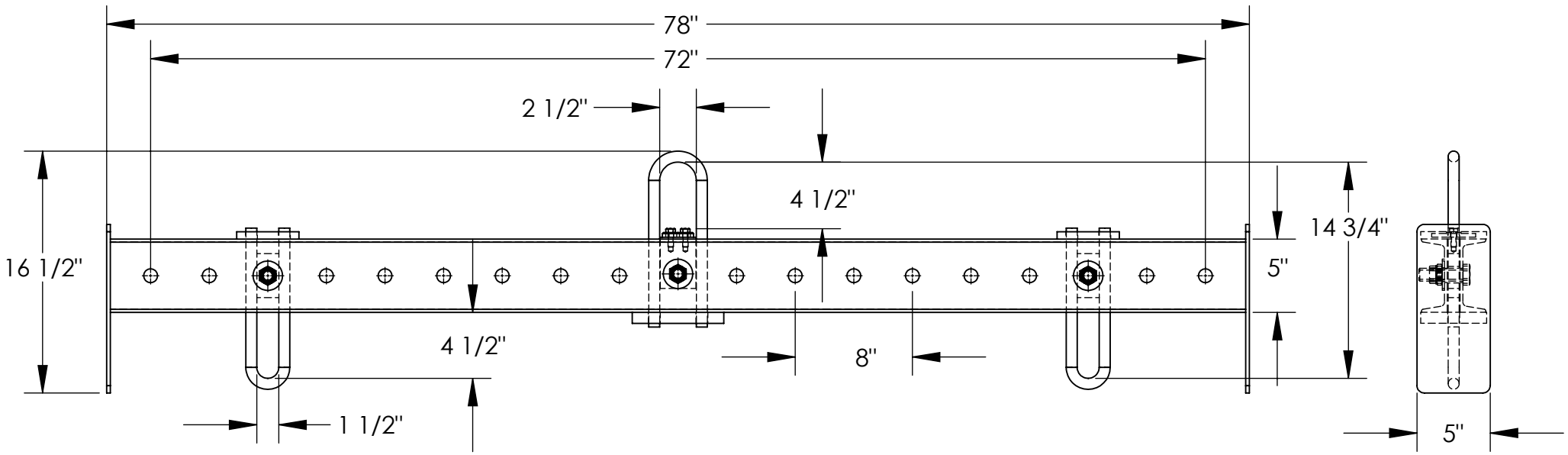

DIMENSION TOLERANCE ± 1/4"

STANDARD FEATURES

MODEL NUMBER IS SBM-25
OVERALL WIDTH IS 5"
OVERALL HEIGHT IS 16 1/2"
OVERALL LENGTH IS 78"
USABLE UPPER BAIL IS 2 1/2" x 4 1/2"
USABLE LOWER BAIL IS 1 1/2" x 4 1/2"
MINIMUM SPREAD IS 8"
MAXIMUM SPREAD IS 72"
HEADROOM IS 14 3/4"
CAPACITY IS 2,500 LBS
DURABLE BAKED IN POWDER COATED BLUE FINISH

SPECIAL FEATURES

NONE

APPROVAL

I, THE UNDERSIGNED, AGREE THAT THE PRODUCT AS REPRESENTED SATISFIES DESIGN AND DIMENSION REQUIREMENTS. I ALSO ACKNOWLEDGE MY DUTY TO CONFIRM PRODUCT AND INSTALLATION COMPLIANCE WITH ALL APPLICABLE FEDERAL, STATE AND LOCAL REGULATIONS AND STANDARDS.

UNITS REQUIRING APPROVAL DRAWINGS OR MODIFIED ARE NON-RETURNABLE

[ ] As drawn [ ] As marked

Signed:_____ Date:_____

Printed Name:_____

LEAD TIME WILL START UPON RECEIPT OF SIGNED APPROVAL DRAWING

DISTRIBUTOR'S NAME: VESTIL MANUFACTURING		P.O.# X
		W.O.# X
DRAWN BY: K.YOUNG	DATE: 5/17/05	SALES: X
REFERENCE: X	SCALE: 1:48	FILE NAME: 08-007-043
QUOTED LEAD TIME: X	QUOTE # X	